TFT MODULE SPECIFICATION

RVT70HSTNWC00-B

IPS RGB 7.0'' LCD TFT DATASHEET

Rev.1.2
2021-07-29

ITEM	CONTENTS	UNIT
LCD Type	TFT/Transmissive/Normally black/IPS	/
Size	7.0	Inch
Viewing Direction	Free	/
Outside Dimensions (W x H x D)	179.96 x 119.00 x 7.58	mm
Active Area (W x H)	154.21 x 85.92	mm
Pixel Pitch (W x H)	0.1506 x 0.1432	mm
Resolution	1024 (RGB) x 600	/
Brightness	850	cd/m^2
LCD Interface Type	RGB	/
Color Depth	16.7 M	/
Pixel Arrangement	RGB Vertical Stripe	/
With/Without Touch	With Projected Capacitive Touch Panel	/
CTP Driver	ILI2132A	/
Touch Interface Type	USB /I2C/ Optional UART	/
Bonding Technology	Optical Bonding	/
Weight	214	g

Note 1: RoHS3 compliant

Note 2: LCM weight tolerance: ± 5%.

1. REVISION RECORD

REV NO.	REV DATE	CONTENTS	REMARKS
1.0	2020-08-15	Initial Release	
1.1	2021-04-20	Add” inch” unit on drawing	
1.2	2021-07-29	Updating new template	

2. CONTENTS

1. REVISION RECORD 2
2. CONTENTS 3
3. MODULE CLASSIFICATION INFORMATION 4
4. uxTouch ASSEMBLY 5
5. MODULE DRAWING 6
6. ABSOLUTE MAXIMUM RATINGS 7
7. ELECTRICAL CHARACTERISTICS 7
8. BACKLIGHT ELECTRICAL CHARACTERISTICS 7
9. POWER CONSUMPTION 8
10. ELECTRO-OPTICAL CHARACTERISTICS 8
11. BLOCK DIAGRAM 10
12. INTERFACES DESCRIPTION 10
    - 12.1 TFT assignment 10
    - 12.2 Touch panel assignment 12
    - 12.3 CON1 assignment 13
13. TIMING CHARACTERISTICS 13
    - 13.1 Horizontal input timing 13
    - 13.2 Vertical input timing 13
    - 13.3 Parallel RGB timing characteristic 14
        - 13.3.1 DE MODE 14
        - 13.3.2 HV MODE – Horizontal input timing 14
        - 13.3.3 HV MODE – Vertical input timing 14
        - 13.3.4 Power On/Off sequence 15
14. CAPACITIVE TOUCH SCREEN PANEL SPECIFICATIONS 15
    - 14.1 Mechanical characteristics 15
    - 14.2 Electrical characteristics 15
15. INSPECTION 16
    - 15.1 Inspection condition 16
    - 15.2 Inspection standard 17
16. RELIABILITY TEST 18
17. LEGAL INFORMATION 19

3. MODULE CLASSIFICATION INFORMATION

RV	T	70	H	S	T	N	W	C	00	B
1.	2.	3.	4.	5.	6.	7.	8.	9.	10.	11.

NO.	PARAMETER	SYMBOL
1.	BRAND	RV – Riverdi
2.	PRODUCT TYPE	T – TFT Standard
3.	DISPLAY SIZE	70 – 7.0”
4.	MODEL SERIAL NO.	H – High Brightness, IPS
5.	RESOLUTION	S – 1024 x 600 px
6.	INTERFACE	T – TFT LCD, RGB
7.	FRAME	N – Without Mounting Metal Frame
8.	BACKLIGHT TYPE	W – LED White
9.	TOUCH PANEL	C – With Capacitive Touch Panel
10.	VERSION	00 – (00-99)
11.	BONDING TECHNOLOGY	B – Optical Bonding

4. uxTouch ASSEMBLY

uxTouch are LCD TFT displays with specially designed projected capacitive touch panels. uxTouch display can be mounted without any additional holes in the housing. Our standard uxTouch displays include double-sided adhesive tape (DST) to stick TFT easily to the housing.

uxTouch models with double-side adhesive tape can be mounted by fastening the glass to the housing.

Figure 1. General view of the module

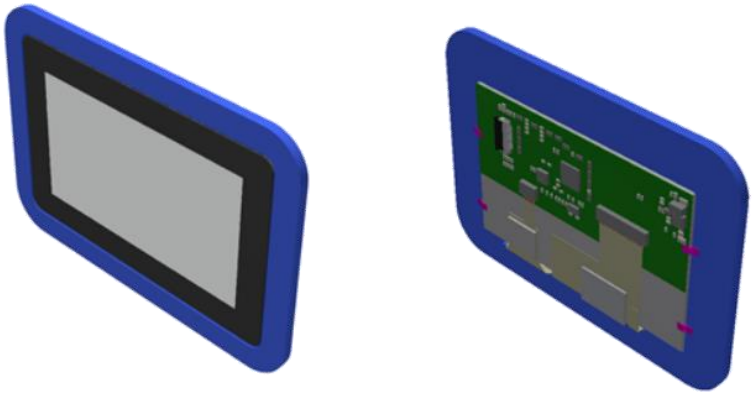

Revision:	Changes:	Date:
1.0	Initial Case	2020.08.07
1.1	Dimension Overhaul	2021.04.19

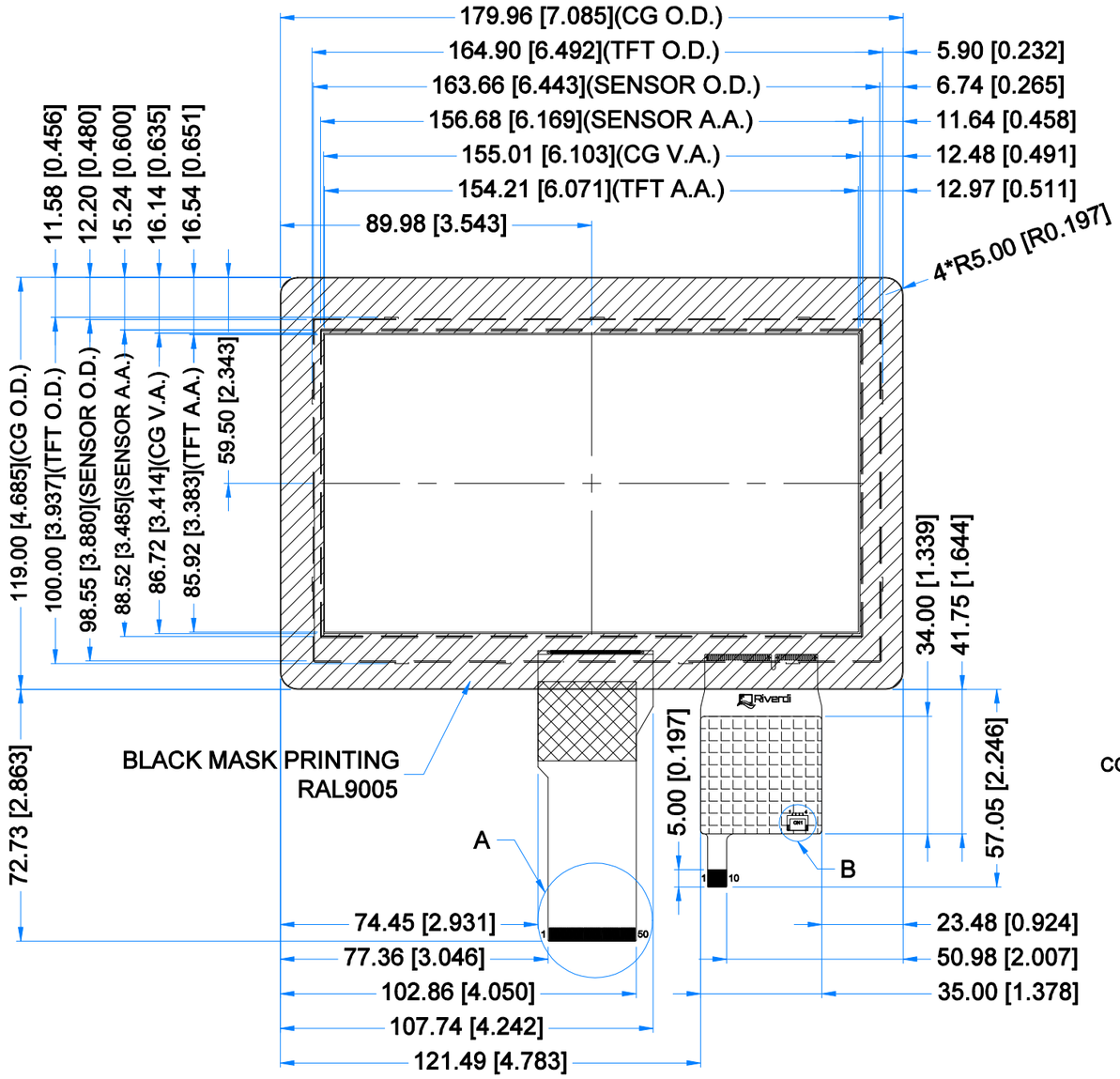

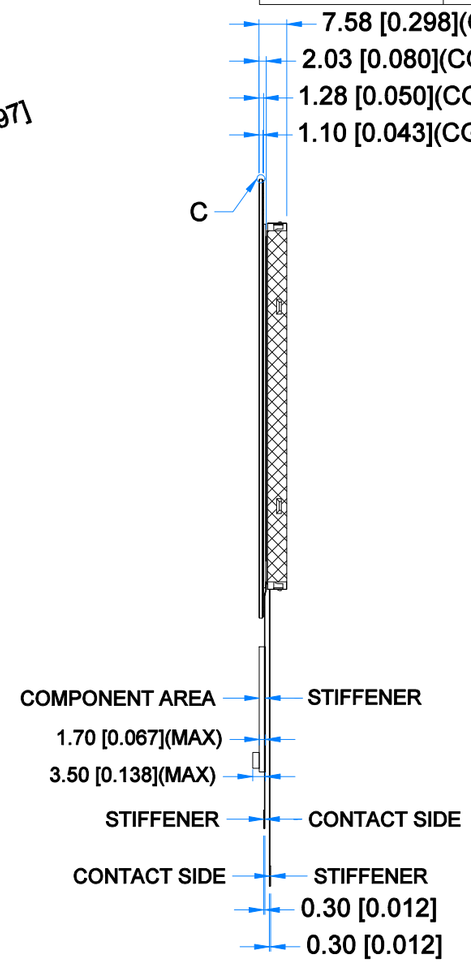

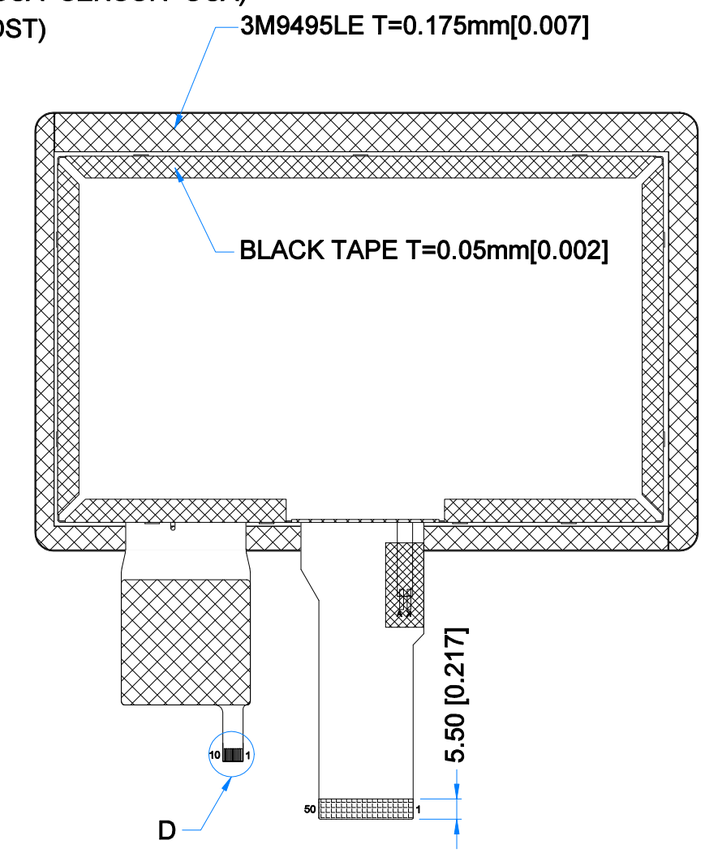

DETAIL A
SCALE 2:1

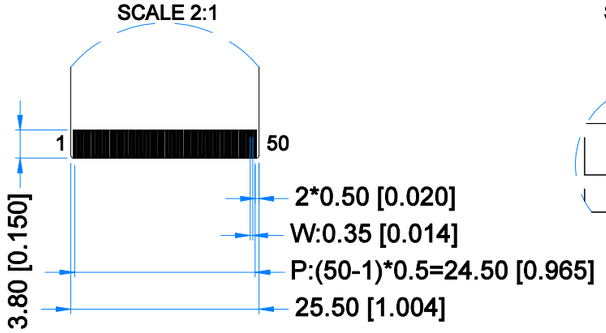

DETAIL B
SCALE 4:1

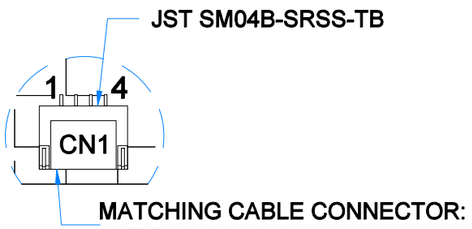

DETAIL C
SCALE 4:1

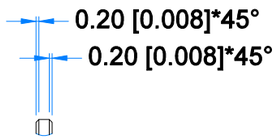

DETAIL D
SCALE 2:1

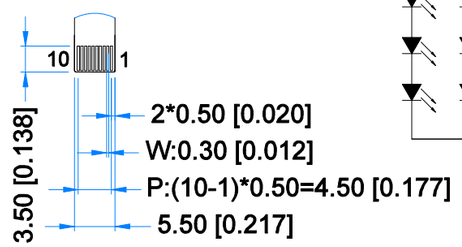

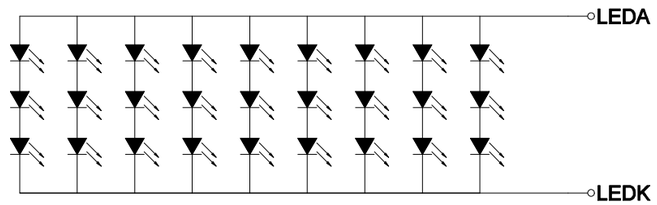

LED Diagram Circuit

TFT NOTES:
1. LCD TYPE: TRANSMISSIVE, NORMALLY BLACK,IPS
2. RESOLUTION: 1024x600
3. VIEWING ANGLE: FREE
4. LCD DRIVER:EK79001HK+EK73215BCGA
5. INTERFACE:RGB
6. OPERATING VOLTAGE: 3.3V
7. BACKLIGHT: 27PCS LED, V_F=9.6V, I_F=270mA

TP NOTES:
1. TP STRUCTURE: G+G
2. CG THICKNESS: 1.10 mm
3. DRIVER IC: ILI2132A
4. INTERFACE: USB /I2C/OPTIONAL UART
5. OPERATING VOLTAGE: 3.3V(CTP I2C); 5.0V(CTP USB)

GENERAL NOTES:
1. MODULE SURFACE LUMINANCE: 850 cd/m^2
2. OPATICAL BONDING
3. OPERATING TEMPERATURE: -20°C ~ 70°C
4. STORAGE TEMPERATURE: -30°C ~ 80°C
5. WITHOUT INDIVIDUAL TOLERANCE: ±0.3mm
6. RoHS3 COMPLIANT

PN: RVT70HSTNWC00-B			
SN:			
DRAWN: M.Natywa	2021.04.19	1:1.66	
CHECKED: Carol	2021.04.20	[mm]	
APPR:		ISO A3	P. 1 of 1

6. ABSOLUTE MAXIMUM RATINGS

PARAMETER	SYMBOL	MIN	MAX	UNIT
Power for Circuit Driving	VDD	-0.3	3.96	V
	AVDD	-0.5	14.85	
	VGH	-0.3	40	
	VGL	-20.0	0.3	
Operating Temperature	T_{OP}	-20	70	°C
Storage Temperature	T_{ST}	-30	80	°C
Operating Humidity (@ 25 ± 5°C)	RH	10%	-	RH
Storage Humidity (@ 25 ± 5°C)	RH	10%	-	RH

Note. The following are maximum values. If exceeded, it may cause operation or damage to the unit.

7. ELECTRICAL CHARACTERISTICS

PARAMETER	SYMBOL	MIN	TYP	MAX	UNIT	NOTE
Supply Voltage for Module	DVDD	3.0	3.3	3.6	V	
	VGH	17	18	19		
	VGL	-6.6	-6.0	-5.4		
	AVDD	9.4	9.6	9.8		
	VCOM	3.6	3.8	4.0		
Current of Power Supply	IDD	-	30	45	mA	DVDD = 3.3V
	IADD	-	35	45	mA	AVDD = 9.6V
	IGH	-	0.5	1	uA	VGH = 18V
	IGL	-	0.5	1	mA	VGL= -6V
Input Voltage ' H ' level	V_{IH}	0.7DVDD	-	DVDD	V	Note 1
Input Voltage ' L ' level	V_{IL}	0	-	0.3VDD	V	Note 1

Note 1. STHL, STHR, OEH, L/R, CPH1÷CPH3, STVD, STVU, OEV, CKV, U/D.

8. BACKLIGHT ELECTRICAL CHARACTERISTICS

PARAMETER	SYMBOL	MIN	TYP	MAX	UNIT	NOTE
Backlight Driving Voltage	V_F	9.0	9.6	10.2	V	
Backlight Driving Current	I_F	-	270	-	mA	
Backlight Power Consumption	W_{BL}	-	2592	-	mW	
LED Lifetime	-	-	50,000	-	hours	Note 1

Note 1. If LED is driven by high current, the lifetime of LED will be reduced. Operating life means brightness goes down to 50% initial brightness. Typical operating lifetime is estimated data.

9. POWER CONSUMPTION

PARAMETER	SYMBOL	CONDITION	MIN	TYP	MAX	UNIT	NOTE
Gate on Power Current	IVGH	VGH=18V	-	0.5	1	mA	Note 1
Gate off Power Current	IVGL	VGL=6V	-	0.5	1		
Digital Power Current	IDVDD	DVDD=3.3V	-	30	45		
Analog Power Current	IAVDD	AVDD=9.6 V	-	35	45		
Total Power Consumption	PC		-	447	604	mW	

Note. Typ. Specification: Gray-level test pattern; Max Specification: Black test pattern

256 gray patten

black pattern

10. ELECTRO-OPTICAL CHARACTERISTICS

ITEM	SYMBOL	CONDITION	MIN	TYP	MAX	UNIT	RMK	NOTE
Response Time	Tr+Tf	θ=0° ø=0° Ta=25 °C	-	35	-	ms	FIG 2.	4
Contrast Ratio	Cr		-	800	-	---	FIG 3	1
Luminance Uniformity	δ WHITE		-	75	-	%	FIG 3.	3
Surface Luminance	Lv		-	850	-	cd/m²	FIG 3.	2
Viewing Angle Range	θ	ø = 90°	-	85	-	deg	FIG 4.	6
		ø = 270°	-	85	-	deg	FIG 4.	
		ø = 0°	-	85	-	deg	FIG 4.	
		ø = 180°	-	85	-	deg	FIG 4.	
CIE (x, y) Chromaticity	Rx	θ=0° ø=0° Ta=25 °C	0.578	0.618	0.658	-	FIG 3.	5
	Ry		0.489	0.329	0.369	-		
	Gx		0.376	0.416	0.456	-		
	Gy		0.493	0.533	0.573	-		
	Bx		0.071	0.111	0.151	-		
	By		0.108	0.148	0.188	-		
	Wx		0.270	0.310	0.350	-		
	Wy		0.290	0.330	0.370	-		

Note 1. Contrast Ratio (CR) is defined mathematically as below, for more information see Figure 3.

$$\text{Contrast Ratio} = \frac{\text{Average Surface Luminance with all white pixels (P1, P2, P3, P4, P5)}}{\text{Average Surface Luminance with all black pixels (P1, P2, P3, P4, P5)}}$$

Note 2. Surface luminance is the LCD surface from the surface with all pixels displaying white. For more information see Figure 3.

Lv = Average Surface Luminance with all white pixels (P1, P2, P3, P4, P5)

Note 3. The uniformity in surface luminance δ WHITE is determined by measuring luminance at each test position 1 through 5, and then dividing the minimum luminance of 5 points luminance by maximum luminance of 5 points luminance. For more information see Figure 3.

$$\delta\ \text{WHITE} = \frac{\text{Minimum Surface Luminance with all white pixels (P1, P2, P3, P4, P5)}}{\text{Maximum Surface Luminance with all white pixels (P1, P2, P3, P4, P5)}}$$

Note 4. Response time is the time required for the display to transition from white to black (Rise Time, Tr) and from black to white (Decay Time, Tf). For additional information see Figure 2. The test equipment is Autronic-Melchers's ConoScope series.

Note 5. CIE (x, y) chromaticity, the x, y value is determined by measuring luminance at each test position 1 through 5, and then make average value.

Note 6. Viewing angle is the angle at which the contrast ratio is greater than 2. For TFT module the contrast ratio is greater than 10. The angles are determined for the horizontal or x axis and the vertical or y axis with respect to the z axis which is normal to LCD surface. For more information see Figure 4.

Note 7. For viewing angle and response time testing, the testing data is based on Autronic-Melchers's ConoScope series. Instruments for Contrast Ratio, Surface Luminance, Luminance Uniformity, CIE the test data is based on TOPCON's BM-5 photo detector.

Figure 2. The definition of response time

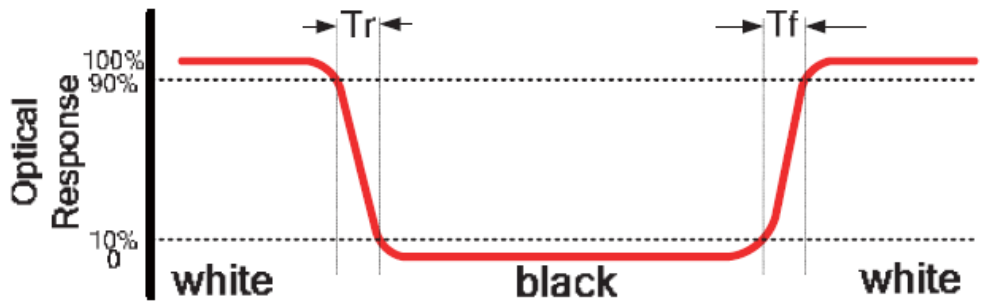

Figure 3. Measuring method for Contrast ratio, surface luminance, Luminance uniformity, CIE (x, y) chromaticity

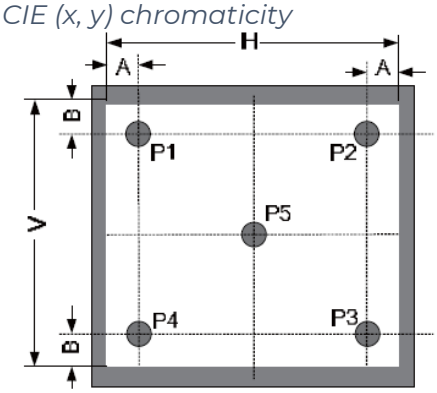

A: 5mm

B: 5mm

H, V: Active Area

Light spot size ϕ=5mm, 500mm distance from the LCD surface to detector lens.

Measurement instrument is TOPCON'S luminance meter BM-5

Figure 4. The definition of viewing angle

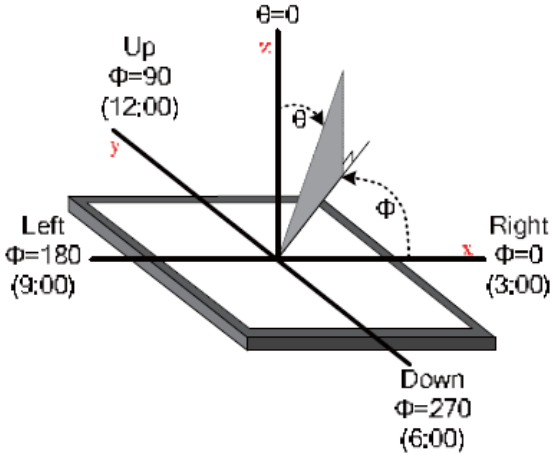

11. BLOCK DIAGRAM

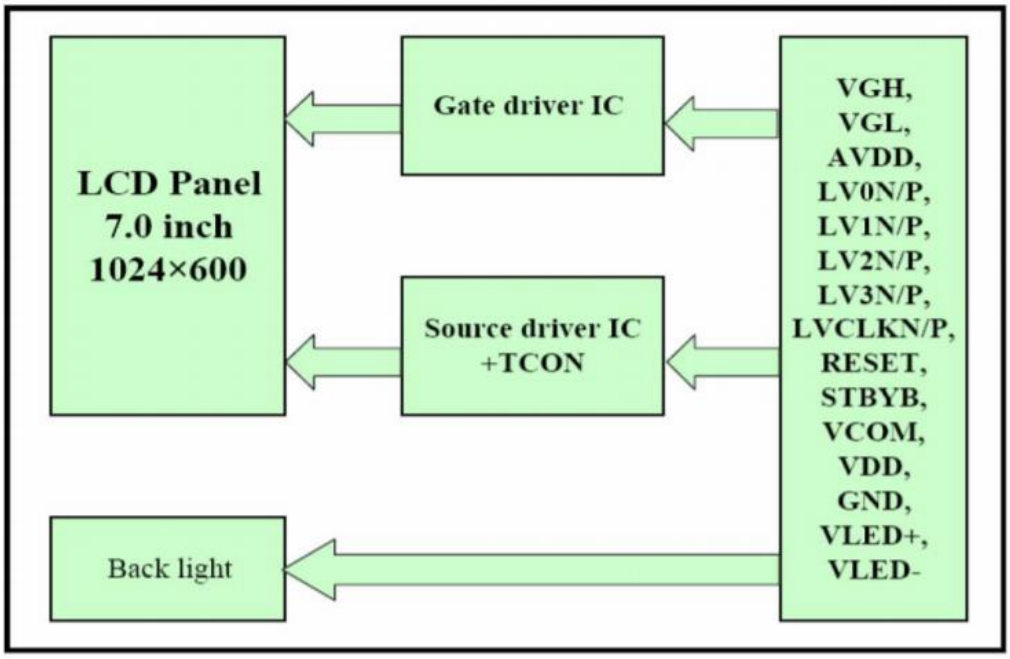

12. INTERFACES DESCRIPTION

12.1 TFT assignment

PIN NO.	SYMBOL	I/O	DESCRIPTION	NOTES
1	VLED+	P	Power for LED Backlight (Anode)	
2	VLED+	P	Power for LED Backlight (Anode)	
3	VLED-	P	Power for LED Backlight (Cathode)	
4	VLED-	P	Power for LED Backlight (Cathode)	
5	GND	P	Ground	
6	VCOM	I	Common Voltage	

7	DVDD	P	Power for Digital Circuit	
8	MODE	I	DE/SYNC mode select	Note 1
9	DE	I	Data Input Enable	
10	VS	I	Vertical Sync Input	
11	HS	I	Horizontal Sync Input	
12	B7	I	Blue Data (MSB)	
13	B6	I	Blue Data	
14	B5	I	Blue Data	
15	B4	I	Blue Data	
16	B3	I	Blue Data	
17	B2	I	Blue Data	
18	B1	I	Blue Data	Note 2
19	B0	I	Blue Data (LSB)	Note 2
20	G7	I	Green Data (MSB)	
21	G6	I	Green Data	
22	G5	I	Green Data	
23	G4	I	Green Data	
24	G3	I	Green Data	
25	G2	I	Green Data	
26	G1	I	Green Data	Note 2
27	G0	I	Green Data (LSB)	Note 2
28	R7	I	Red Data (MSB)	
29	R6	I	Red Data	
30	R5	I	Red Data	
31	R4	I	Red Data	
32	R3	I	Red Data	
33	R2	I	Red Data	
34	R1	I	Red Data	Note 2
35	R0	I	Red Data (LSB)	Note 2
36	GND	P	Ground	
37	DCLK	P	Sample Clock	
38	GND	P	Ground	
39	L/R	I	Left/Right Selection	Note 4,5
40	U/D	I	Up/Down Selection	Note 4,5
41	VGH	P	Gate ON Voltage	
42	VGL	P	Gate OFF Voltage	
43	AVDD	P	Power for Analog Circuit	
44	RESET	I	Global Reset Pin	Note 6
45	NC	-	No Connection	
46	VCOM	I	Common Voltage	
47	DITHUB	I	Dithering Function	Note 7
48	GND	I	Ground	
49	NC	-	No Connection	
50	NC	-	No Connection	

I: input, O: output, P: Power

Note 1. DE/SYNC mode select. Normally pull high.

H:DE Mode. L: HS/VS mode.
When select DE mode, MODE="1", VS and HS must pull high.

Note 2. When input 18 bits RGB data, the two low bits of R, G and B data must be grounded.

Note 3. Data shall be latched at the falling edge of DCLK.

Note 4. Selection of scanning mode:

SETTING OF SCAN CONTROL INPUT		SCANNING DIRECTION
U/D	L/R	
GND	DVDD	Up to down, left to right
DVDD	GND	Down to up, right to left
GND	GND	Up to down, right to left
DVDD	DVDD	Down to up, left to right

Note 5. Definition of scanning direction, refer to the figure as below:

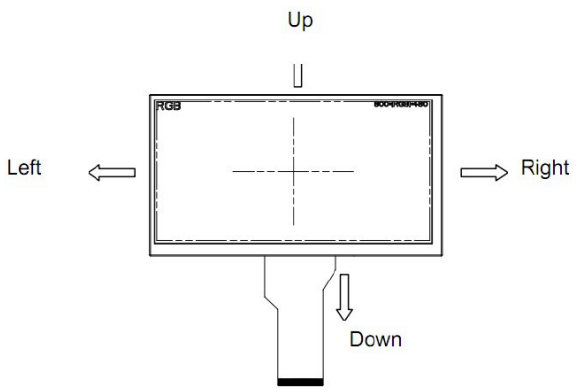

Note 6. Global reset pin. Active low to enter reset state, suggest connecting with an RC reset circuit for stability. Normally pull high.

Note 7. Dithering function enable control, normally pull high.
When DITHUB="1", Disable internal dithering function.
When DITHUB="0", Enable internal dithering function.

12.2 Touch panel assignment

PIN NO.	SYMBOL	DESCRIPTION	NOTE
1	USB_GND	USB_ Ground	
2	USB_VDD	USB Power for CTP, 5.0V	
3	USB_D–	USB _Data Signal –	
4	USB_D+	USB _Data Signal +	
5	I2C_GND	I2C _ Ground	
6	I2C_VDD	I2C _Power for CTP, 3.3 V	
7	I2C_RST	I2C _Reset Pin, Active low	Note 1
8	I2C_SCL	I2C _Clock Input	
9	I2C_INT	I2C _Interrupt Signal from CTP, Active low	
10	I2C_SDA	I2C _Data Signal	

Note 1. External pull-up resistors are required.

12.3 CON1 assignment

PIN NO.	SYMBOL	DESCRIPTION
1	USB_VDD	USB_Power for CTP, DC 5.0V
2	USB_D–	USB _Data Signal -
3	USB_D+	USB _Data Signal +
4	USB_GND	USB_Ground

13.TIMING CHARACTERISTICS

13.1 Horizontal input timing

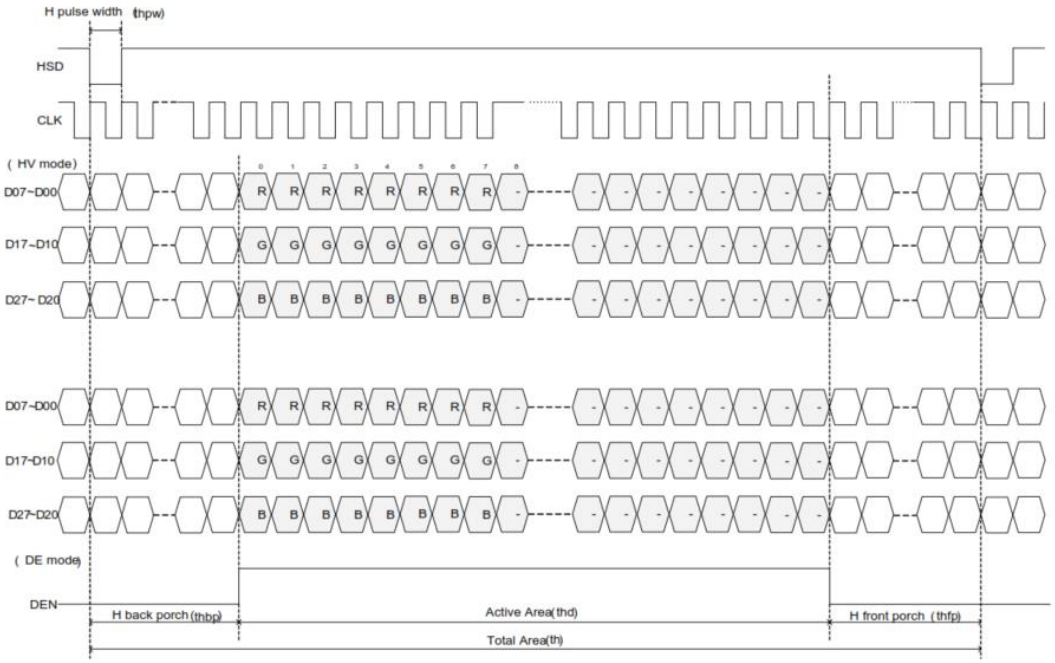

13.2 Vertical input timing

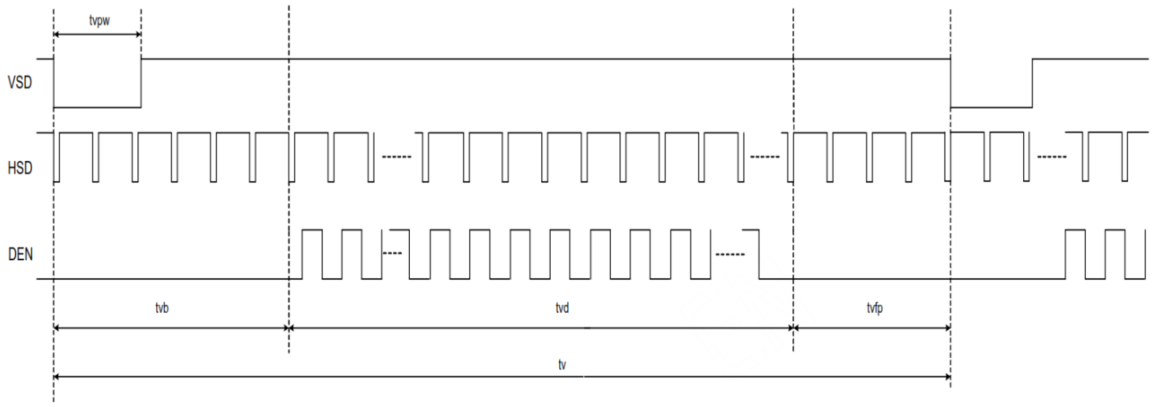

13.3 Parallel RGB timing characteristic

Note: DE/SYNC mode select. Normally pull high. H:DE Mode. L: HS/VS mode. When select DE mode, MODE="1", VS and HS must pull high.

13.3.1 DE MODE

PARAMETER	SYMBOL	VALUE			UNIT
		MIN.	TYP.	MAX.	
DCLK frequency (Frame rate 60Hz)	fclk	40.8	51.2	67.2	MHz
Horizontal display area	thd		1024		DCLK
HSYNC period time	th	1114	1344	1400	
HSYNC blanking	thb+thfp	90	320	376	
Vertical display area	tvd		600		H
VSYNC period time	tv	610	635	800	
VSYNC blanking	tvb+tvfp	10	85	200	

13.3.2 HV MODE – Horizontal input timing

PARAMETER	SYMBOL	VALUE			UNIT
		MIN.	TYP.	MAX.	
Horizontal display area	thd		1024		DCLK
DCLK frequency (frame rate 60Hz)	fclk	44.9	51.2	63	MHz
1 Horizontal Line	th	1200	1344	1400	DCLK
HSYNC pulse width	thpw	1	-	140	
HSYNC back porch	thbp	160	160	160	
HSYNC front porch	thfp	16	160	216	

13.3.3 HV MODE – Vertical input timing

PARAMETER	SYMBOL	VALUE			UNIT
		MIN.	TYP.	MAX.	
Vertical display area	tvd		600		H
VSYNC period time	tv	624	635	750	
VSYNC pulse width	tvpw	1	-	20	
VSYNC back porch	tvb	23	23	23	
VSYNC front porch	tVfp	1	12	127	

13.3.4 Power On/Off sequence

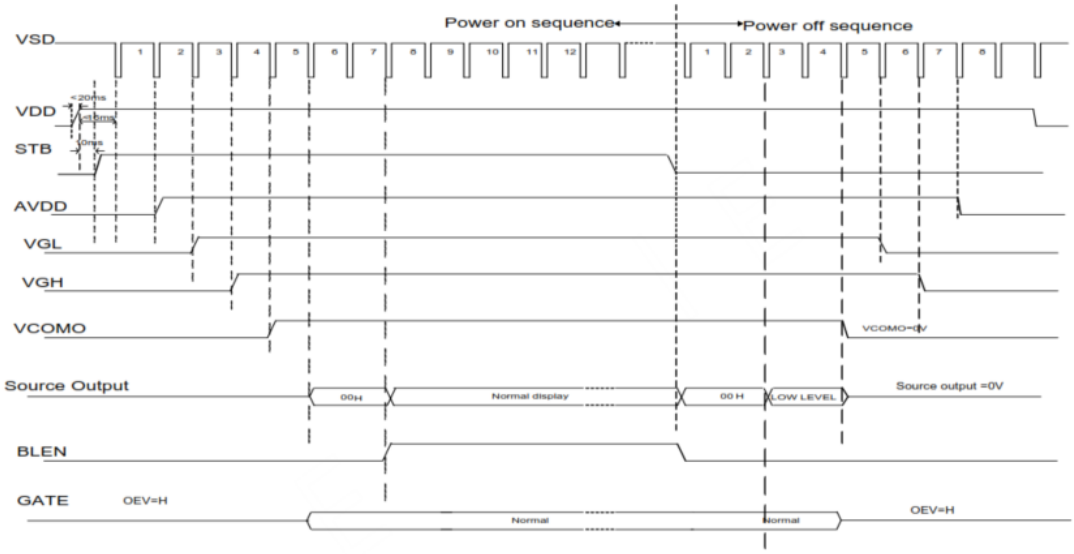

14. CAPACITIVE TOUCH SCREEN PANEL SPECIFICATIONS

14.1 Mechanical characteristics

DESCRIPTION	SPECIFICATION	REMARK
Touch Panel Size	7.0 inch	uxTouch
Outline Dimension of CTP	179.96 mm x 119.00 mm	
Product Thickness	2.03 mm	
Glass Thickness	1.1 mm	
CTP View Area	155.01 mm x 86.72 mm	
Sensor Active Area	156.68 mm x 88.52 mm	
Structure type	Glass + Glass	
Surface Hardness	7H	

14.2 Electrical characteristics

DESCRIPTION		SPECIFICATION
Power Consumption (IDD)	Active Mode	90 mA
	Sleep Mode	10 mA
Linearity		+/- 1.5mm
Controller		ILI2132A
Resolution		1024 x 600

15. INSPECTION

Standard acceptance/rejection criteria for TFT module

15.1 Inspection condition

Ambient conditions:

- Temperature: 25 ± 2°C
- Humidity: (60 ± 10) %RH
- Illumination: Single fluorescent lamp non-directive (300 to 700 lux)

Viewing distance: 35 ± 5cm between inspector bare eye and LCD.

Viewing Angle: U/D: 45°/45°, L/R: 45°/45°

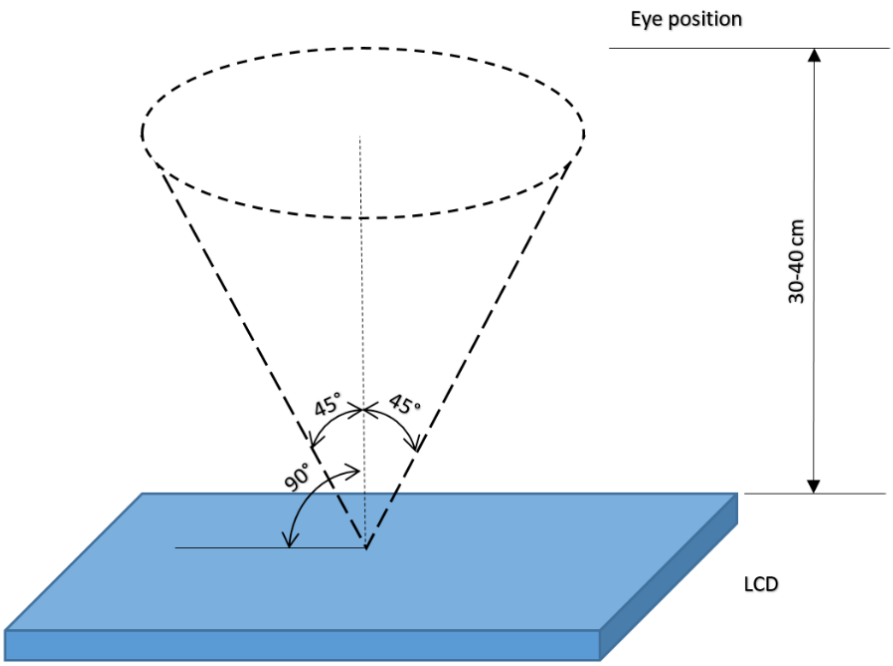

15.2 Inspection standard

ITEM	CRITERION		
Black spots, white spots, light leakage, Foreign Particle (round Type)	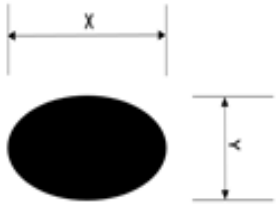 D=(x+y)/2 Spots density: 10 mm	Size =7”	
		Average Diameter	Qualified Qty
		D ≤ 0.2 mm	Ignored
		0.2 mm < D ≤ 0.3 mm	N≤3
		0.5mm < D	Not allowed
LCD black spots, white spots, light leakage (line Type)	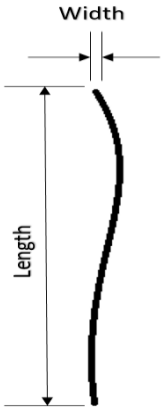 Spots density: 10 mm	Size = 7”	
		Length	Width	Qualified Qty
		-	W ≤ 0.05	Ignored
		L ≤ 5.0	0.05< W ≤ 0.1	N≤3
		5.0 < L	0.1< W	Not allowed
Bright/Dark Dots	Size = 7		
	Item	Qualified Qty	
	Bright dots	N ≤ 2	
	Dark dots	N ≤ 3	
	Total Bright and Dark Dots	N ≤ 4	
Clear spots	Size ≥ 5”		
	Average Diameter	Qualified Qty	
	D < 0.2 mm	Ignored	
	0.2 mm < D < 0.3 mm	4	
	0.3 mm < D < 0.5 mm	2	
	0.5 mm < D	0	
	Spots density: 10 mm		
Polarizer bubbles	Size ≥ 5”		
	Average Diameter	Qualified Qty	
	D < 0.2 mm	Ignored	
	0.2 mm < D < 0.5 mm	2	
	0.5 mm < D	1	
Touch panel spots	Size ≥ 5”		
	Average Diameter	Qualified Qty	
	D < 0.25 mm	Ignored	
	0.25 mm < D < 0.5 mm	4	

	0.5 mm < D		0
Touch panel white line scratch	Size ≥ 5”		
	Length	Width	Qualified Qty
	-	W < 0.03	Ignored
	L < 5.0	0.03 < W < 0.05	2
	-	0.05 < W	0

16.RELIABILITY TEST

NO.	TEST ITEM	TEST CONDITION	NOTE
1	High Temperature Storage	80°C/120 hours	Note 1
2	Low Temperature Storage	-30°C/120 hours	
3	High Temperature Operating	70 °C /120 hours	
4	Low Temperature Operating	-20°C/120 hours	
5	High Temperature and High Humidity	Humidity 40℃, 90%RH, 120Hrs	
6	Thermal Cycling Test (No operation)	-20℃ for 30min, 70℃ for 30 min. 100 cycles. Then test at room temperature after 1 hour	Note 2
7	Vibration Test	Frequency: 10 ÷ 55 Hz. Stroke: 1.5 mm. Sweep: 10Hz ÷ 55Hz ÷ 10 Hz. 2 hours for each direction of X, Y, Z (Total 6 hours)	
8	Package Drop Test	Height: 60 cm 1 corner, 3 edges, 6 surfaces	

Note 1. Sample quantity for each test item is 5 ÷ 10 pcs.

Note 2. Before cosmetic and function test, the product must have enough recovery time, at least 2 hours at room temperature.

17.LEGAL INFORMATION

Riverdi grants the guarantee for the proper operation of the goods for a period of 12 months from the date of possession of the goods. If in a consequence of this guaranteed execution the customer has received the defects-free item as replacement for the defective item, the effectiveness period of this guarantee shall start anew from the moment the customer receives the defects-free item.

Information about device is the property of Riverdi and may be the subject of patents pending or granted. It is not allowed to copy or disclosed this document without prior written permission.

Riverdi endeavors to ensure that all contained information in this document is correct but does not accept liability for any error or omission. Riverdi products are in developing process and published information may be not up to date. Riverdi reserves the right to update and makes changes to Specifications or written material without prior notice at any time. It is important to check the current position with Riverdi.

Images and graphics used in this document are only for illustrative the purpose. All images and graphics are possible to be displayed on the range products of Riverdi, however the quality may vary. Riverdi is no liable to the buyer or to any third party for any indirect, incidental, special, consequential, punitive or exemplary damages (including without limitation lost profits, lost savings, or loss of business opportunity) relating to any product, service provided or to be provided by Riverdi, or the use or inability to use the same, even if Riverdi has been advised of the possibility of such damages.

Riverdi products are not fault tolerant nor designed, manufactured or intended for use or resale as on line control equipment in hazardous environments requiring fail–safe performance, such as in the operation of nuclear facilities, aircraft navigation or communication systems, air traffic control, direct life support machines or weapons systems in which the failure of the product could lead directly to death, personal injury or severe physical or environmental damage ('High-Risk Activities'). Riverdi and its suppliers specifically disclaim any expressed or implied warranty of fitness for High-Risk Activities. Using Riverdi products and devices in 'High-Risk Activities' and in any other application is entirely at the buyer's risk, and the buyer agrees to defend, indemnify and hold harmless Riverdi from all damages, claims or expenses resulting from such use. No licenses are conveyed, implicitly or otherwise, under any Riverdi intellectual property rights.